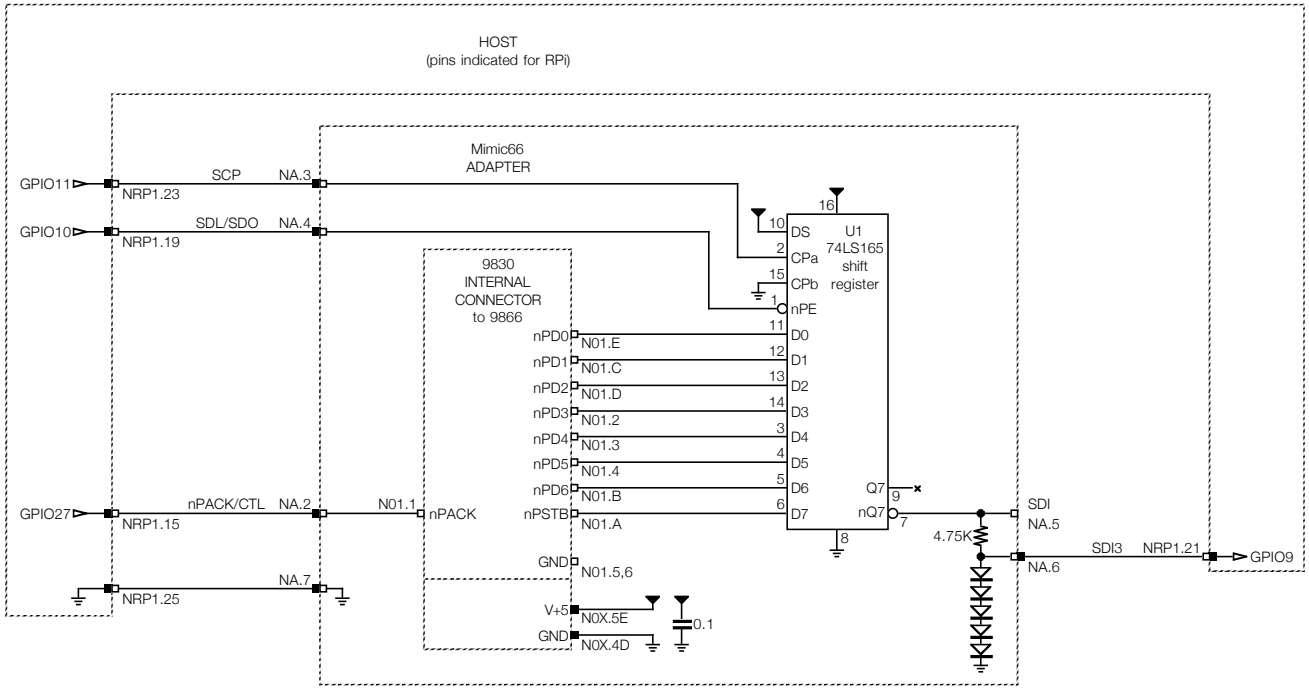

NOTES

- 2013 Summer: Design & protoype / bhilpert.

Mimic66
Printer I/O Adapter
for the HP 9830

Page: 1 / 1 Rendition: 2014 Mar 4